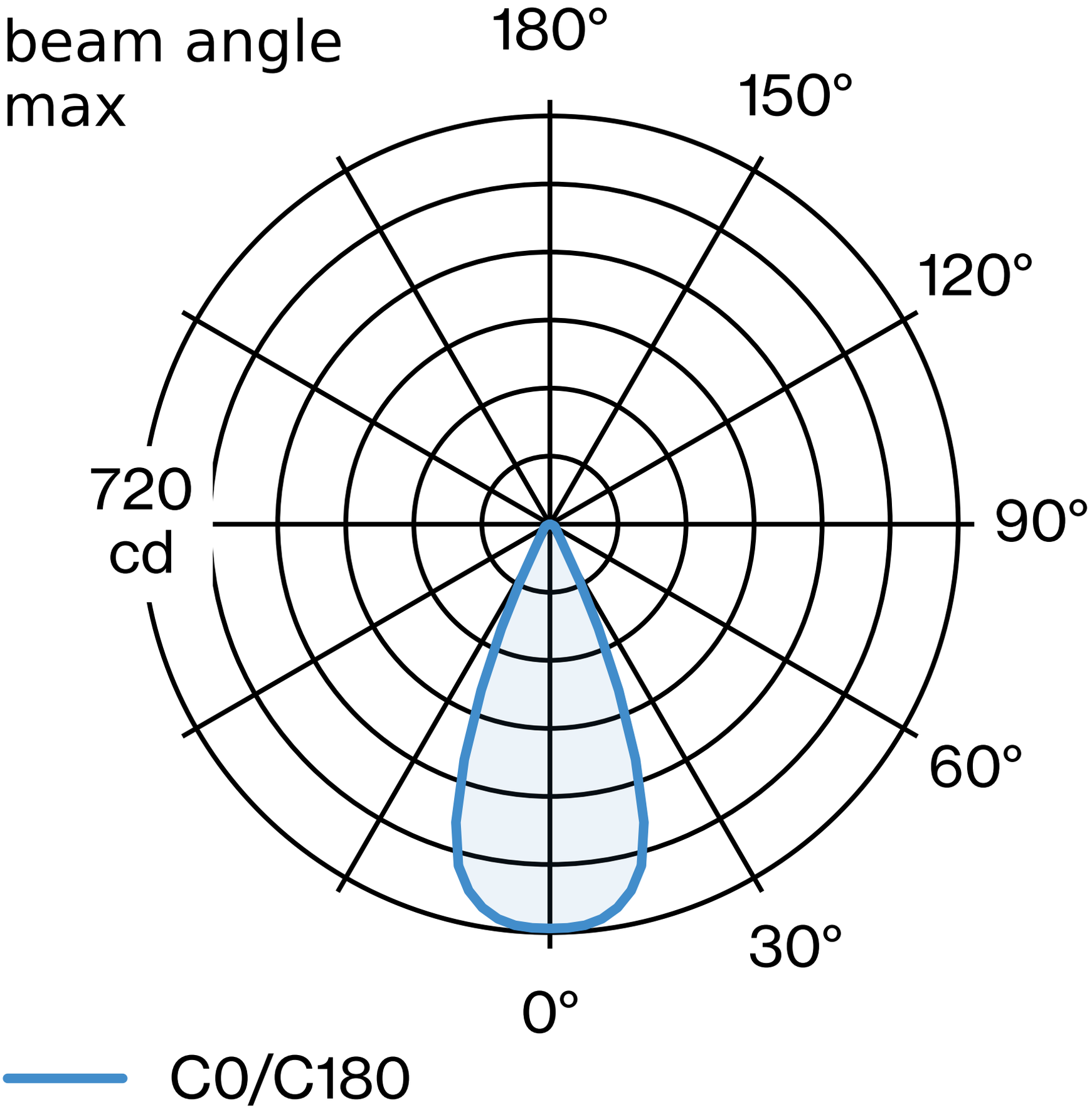
beam angle
max
180°
150°
120°
90°
60°
30°
0°
720
cd
C0/C180