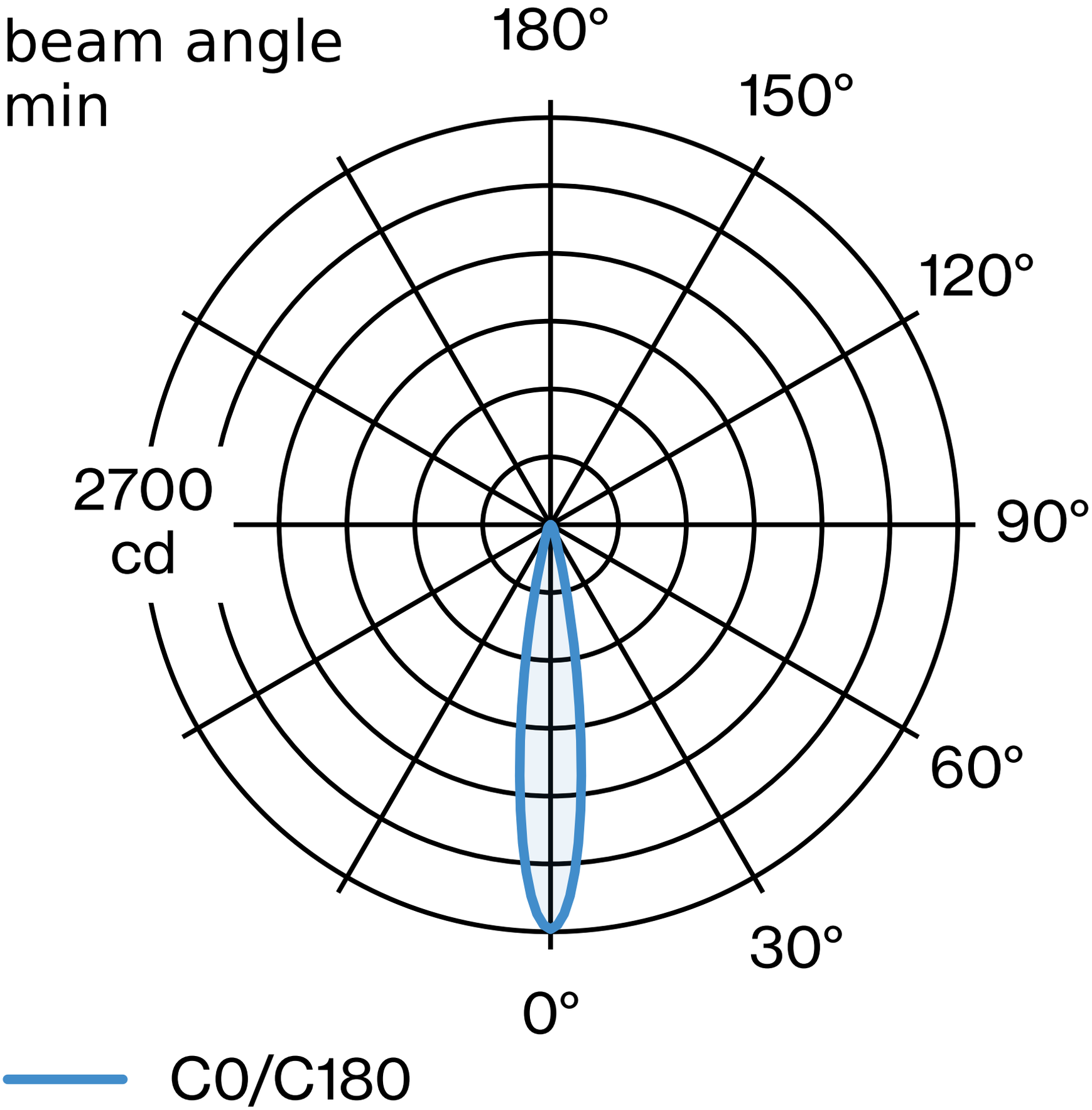
beam angle
min
180°
150°
120°
90°
60°
30°
0°
2700
cd
C0/C180